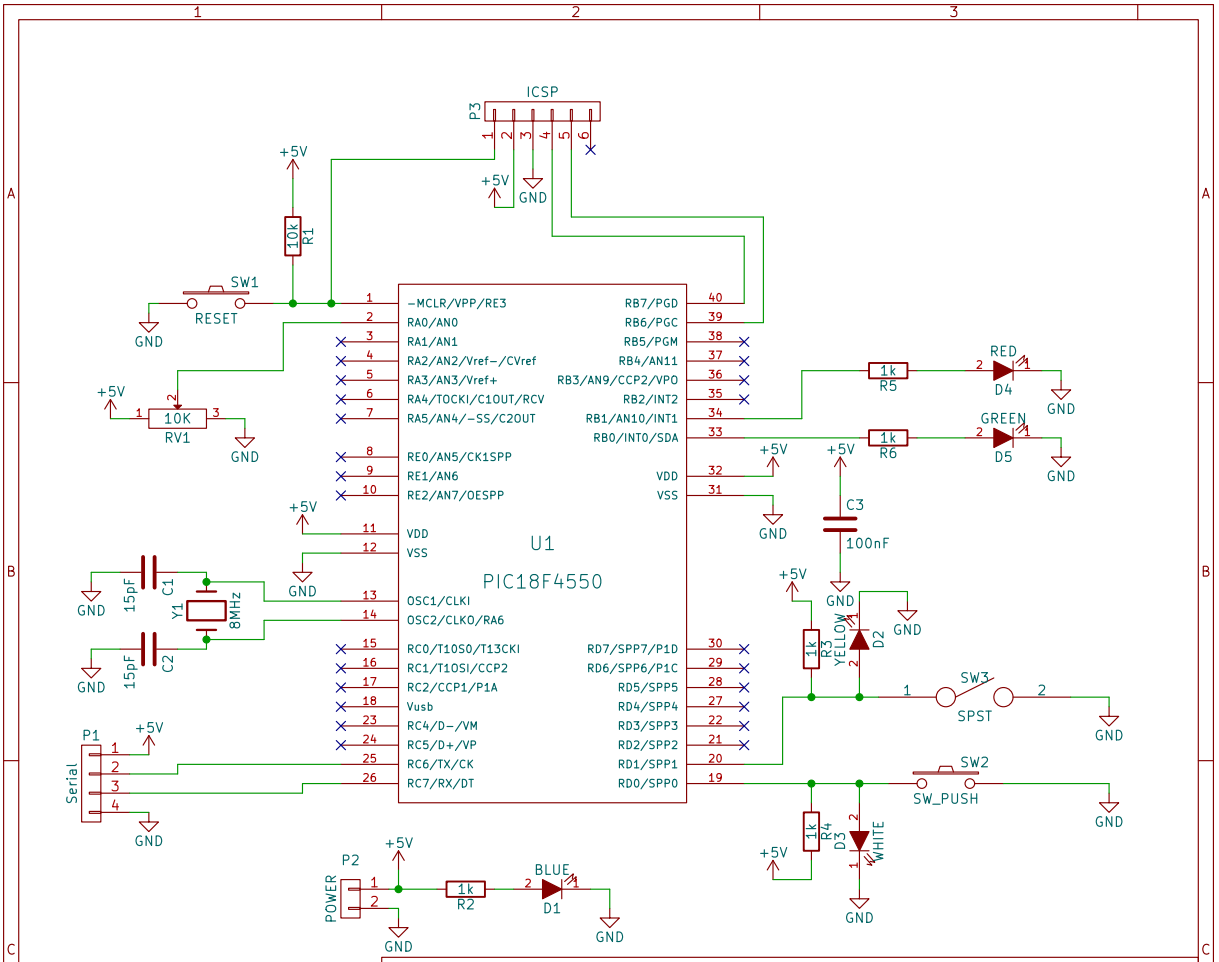


**PICsimLab**

Sheet: /

File: board_x.kicad_sch

***Title: Board X (example)***

| | | |
|---|---|---|
| Size: User | Date: 2022-01-23 | **Rev:** |
| KiCad E.D.A. kicad 6.0.1+dfsg-1 | | Id: 1/1 |