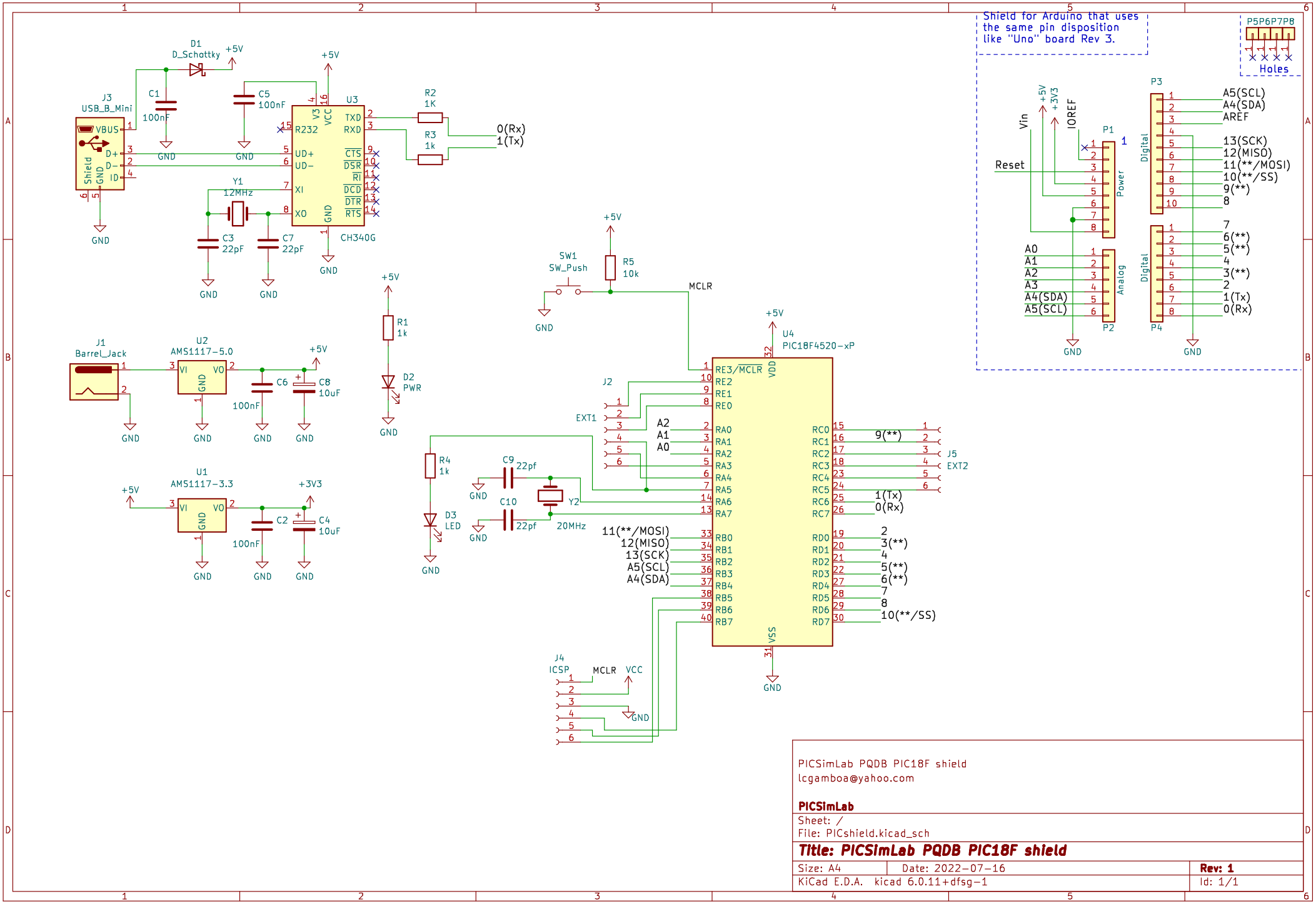
Shield for Arduino that uses the same pin disposition like "Uno" board Rev 3.
P5P6P7P8
Holes
D1
D_Schottky
+5V
J3
USB_B_Mini
VBUS
D+
D-
ID
GND
Shield
C1
100nF
C5
100nF
U3
CH340G
R232
TXD
RXD
CTS
DSR
RI
DCD
DTR
RTS
UD+
UD-
XI
XO
VCC
V3
Y1
12MHz
C3
22pF
C7
22pF
R2
1K
R3
1k
0(Rx)
1(Tx)
J1
Barrel_Jack
U2
AMS1117-5.0
VI
VO
C6
100nF
C8
10uF
U1
AMS1117-3.3
+3V3
C2
100nF
C4
10uF
R1
1k
D2
PWR
SW1
SW_Push
R5
10k
MCLR
U4
PIC18F4520-xP
RE3/MCLR
VDD
VSS
RE2
RE1
RE0
RA0
RA1
RA2
RA3
RA4
RA5
RA6
RA7
RB0
RB1
RB2
RB3
RB4
RB5
RB6
RB7
RC0
RC1
RC2
RC3
RC4
RC5
RC6
RC7
RD0
RD1
RD2
RD3
RD4
RD5
RD6
RD7
J2
EXT1
A2
A1
A0
J5
EXT2
9(**)
1(Tx)
0(Rx)
2
3(**)
4
5(**)
6(**)
7
8
10(**/SS)
11(**/MOSI)
12(MISO)
13(SCK)
A5(SCL)
A4(SDA)
R4
1k
D3
LED
C9
22pf
C10
22pf
Y2
20MHz
J4
ICSP
VCC
P1
Power
P2
Analog
P3
Digital
P4
Vin
IOREF
Reset
AREF
A5(SCL)
A4(SDA)
13(SCK)
12(MISO)
11(**/MOSI)
10(**/SS)
9(**)
8
7
6(**)
5(**)
4
3(**)
2
1(Tx)
0(Rx)
PICSimLab PQDB PIC18F shield
lcgamboa@yahoo.com
PICSimLab
Sheet: /
File: PICshield.kicad_sch
Title: PICSimLab PQDB PIC18F shield
Size: A4
Date: 2022-07-16
Rev: 1
KiCad E.D.A. kicad 6.0.11+dfsg-1
Id: 1/1